☐ Tentative Specification
■ Preliminary Specification
☐ Approval Specification

MODEL NAME: YH101WUM-N63

Version: MA01

Customer: Common

APPROVED BY **SIGNATURE**

Name / Title _____ _____
Note

_____
Please return 1 copy for your confirmation with your signature and comments.

Approved By	Checked By	Prepared By

Contents

No.	Items	Page
1.0	General Description	4
2.0	Absolute Maximum Ratings	6
3.0	Electrical Specifications	7
4.0	Optical Specifications	14
5.0	Reliability Test	18
6.0	Packing Information	19
7.0	Product Label	21
8.0	Handling & Cautions	24
9.0	Appendix	27

1.0 GENERAL DESCRIPTION

1.1 Introduction

QV101WUM-N63is a color active matrix TFT LCD FOB using amorphous silicon TFT 's (Thin Film Transistors) as an active switching devices. This module has a 10.1 inch diagonally measured active area with WUXGA resolutions (1920 horizontal by 1200 vertical pixel array). Each pixel is divided into RED, GREEN, BLUE dots which are arranged in vertical stripe and this module can display 16.7M colors.

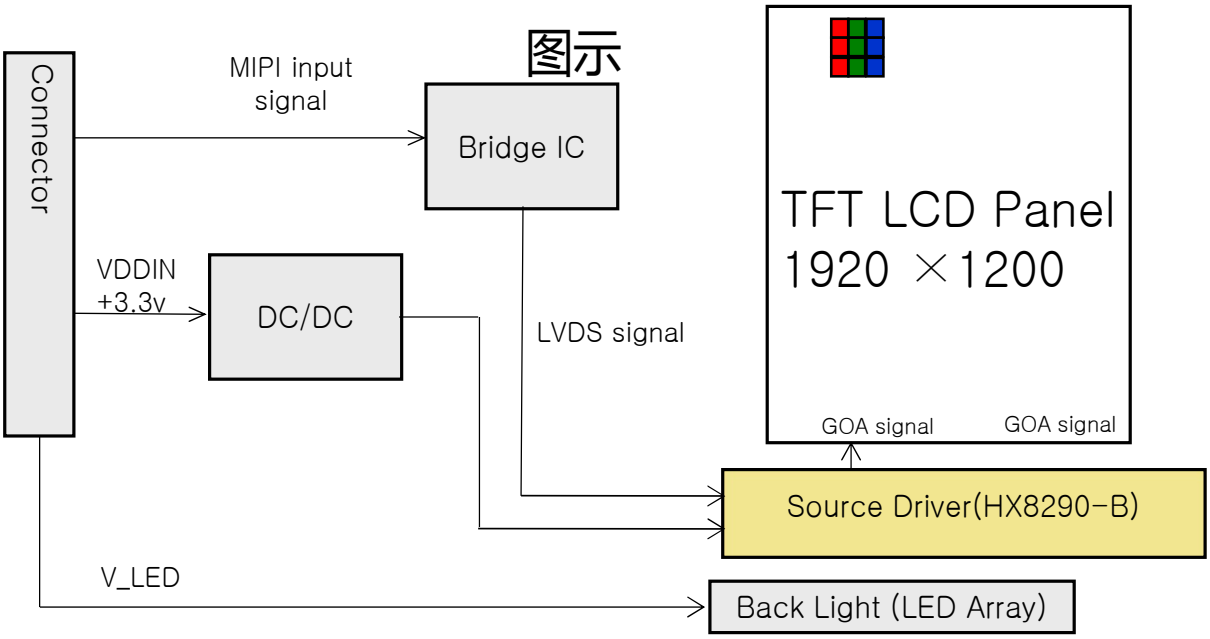

1.2 Features

- MIPI Interface;
- 8bit display 16.7M colors
- High contrast ratio and Transmittance

1.3 Application

- G Industrial

1.4 General Specification

The followings are general specifications at the QV101WUM-N63.

<Table 1. LCD Module Specifications>

Parameter	Specification	Unit	Remarks
Active Area	216.8064(H)*135.504(V)	mm	
Number Of Pixels	1920(H)×1200(V)	pixels	
Pixel Pitch	0.03764(H)×RGB×0.11292(V)	mm	
Pixel Arrangement	Pixels RGB stripe arrangement		
Display Mode	Normally Black		
Display Colors	16.7M(8bit)	colors	
Surface Treatment	HC		
Contrast Ratio	900:1(typ.)		
Viewing Angle(CR>10)	80/80/80/80(typ.)		
Response Time	30(typ.)/35(max.)	ms	
Color Gamut	72%NTSC		@BOE BLU
Power Consumption	BLU:3.73(Typ.)	W	
Outline Dimension	228.3(H)*149.05.(V)*2.7(typ)(5.05max.)	mm	

R2015-6014-A

2.0 ABSOLUTE MAXIMUM RATINGS

The followings are maximum values which, if exceed, may cause faulty operation or damage to the unit.

< Table 2. Absolute Maximum Ratings>

Parameter		Symbol	Min.	Max.	Unit	Remarks
Power Supply	LCD Module	VDD	VSS-0.3	3.6	V	Ta = 25 ℃
Operating Temperature		T_{OP}	-20	+70	℃	
Storage Temperature		T_{ST}	-30	+80	℃	
Operating Ambient Humidity		Hop	10	90	%RH	
Storage Humidity		Hst	10	90	%RH	

3.0 ELECTRICAL SPECIFICATIONS

3.1 TFT LCD Module

< Table 3. LCD Module Electrical specifications > [Ta =25±2 ℃]

Parameter		Symbol	Values			Unit	Notes
			Min.	Typ.	Max.		
Power Supply Voltage		VDD	3.0	3.3	3.6	V	
		VRP			300	mV	Ripple
Power Supply Current		IDD	-	300	360	mA	Note 1
Power Consumption		PLCD	-	1	1.2	W	
Rush current		IRUSH	-	-	3.0	A	Note 2
CMOS Interface	Input Voltage	VIH	2.7		3.3	V	
		VIL	0		0.5	V	
	Output Voltage	VOH	2.7		3.3	V	
		VOL	0		0.5	V	

Notes : 1. The supply voltage is measured and specified at the interface connector of LCM.
The current draw and power consumption specified is for VDD=3.3V, Frame rate f_V and Clock frequency = 490MHz. Test Pattern of power supply current

a) Typ : Mosaic 8 x 6 Pattern(L0/L255)

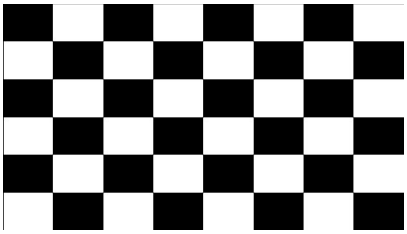

b) Max : skip subPixel(L255)

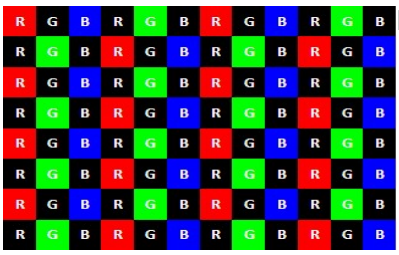

2. The duration of rush current is about 2ms and rising time of Power Input is 1ms(min)

3.2 Back-Light Unit

Table 4. LED Driver Electrical Specifications >

Parameter		Values			Unit	Notes
		Min.	Typ.	Max.		
LED Forward Voltage	V_F	-	-	3.0	V	Note 1 (8pcs Serial 6pcs Parallel.)
LED Forward Current	I_F	-	22	-	mA	
Power Consumption	P_{LED}	-	3.73	-	W	
LED Quantity	-	-	48	-	EA	
LED Life Time	N/A	15000	-	-	Hrs	IF=22mA Note 2

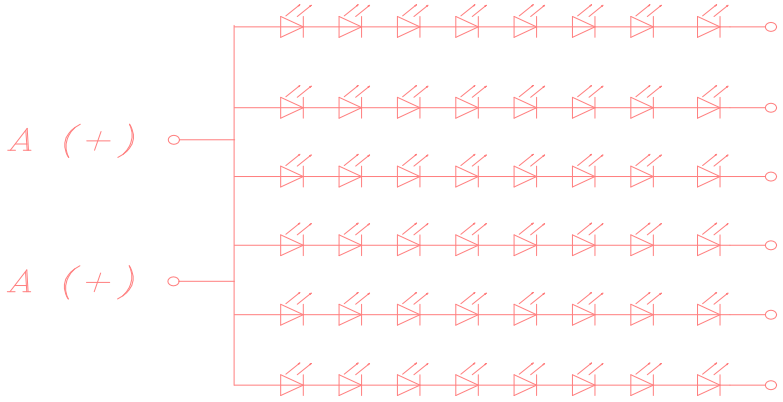

If=120mA,Vf=25.6V,Lv=400cd/m2

Notes : 1. Power supply voltage25.6V for LED Driver
Calculator Value for reference $I_F \times V_F \times 48 / 85\%$(efficiency) = P_{LED}
2. The LED Life-time define as the estimated time to 50% degradation of initial luminous.

3.2 INPUT TERMINAL PIN ASSIGNMENT

This LCD employs one interface connections, a 34 pin connector is used for the LCD module electronics interface.

3.2.1 Pin assignment for LCD module

Connector : FH34SRJ-34S-0.5SH(50) (HRS) or equivalent

< Table4. Pin Assignment for LCD Module Connector >

Pin No.	Symbol	Description	I/O
1	VLEDIN	LED POWER SUPPLY	P
2	VLEDIN	LED POWER SUPPLY	P
3	VLEDIN	LED POWER SUPPLY	P
4	I2C_SDA	OTP_SDA	I
5	I2C_SCL	OTP_SCL	I
6	AGING	H,BIST;L NORMAL mode;	I
7	ID	ID Pin（1.8V拉高或拉低)	I
8	ADDR	1.8V拉高或拉低(预留)	I
9	GND	Power Ground	P
10	GND	Power Ground	P
11	GND	Power Ground	P
12	DSI_D3N	MIPI data pair 3 negative signal	I
13	DSI_D3P	MIPI data pair 3 positive signal	I
14	GND	Power Ground	P
15	DSI_D0N	MIPI data pair 0 negative signal	I
16	DSI_D0P	MIPI data pair 0positive signal	I
17	GND	Power Ground	P
18	DSI_CLKN	MIPI data pair CLK negative signal	I
19	DSI_CLKP	MIPI data pair CLK positive signal	I
20	GND	Power Ground	P

Pin No.	Symbol	Description	I/O
21	DSI_D1N	MIPI data pair 1 negative signal	I
22	DSI_D1P	MIPI data pair 1positive signal	I
23	GND	Power Ground	P
24	DSI_D2N	MIPI data pair 2negative signal	I
25	DSI_D2P	MIPI data pair 2positive signal	I
26	GND	Power Ground	P
27	STBYB	Timing control(3.3V)	I
28	SCL	SCL for EEPROM IC（1.8V）	
29	SDA	SDA for Bridge IC（1.8V）	
30	LED_PWM	Backlight LED Driver PWM（1.8V）	
31	LED_EN	LED_EN	
32	VDD_OTP	OTP Power supply VDD OTP=8.6V	
33	VDDIN	3.3V	P
34	VDDIN	3.3V	P

3.3 Interface timing Parameter and AC/DC Parameter

The QV101WUM-N63 is operated by the DE only

< Table5. MIPI Timing Parameter >

ITEM			SYNBOL	min	typ	max	UNIT
LCD	Frame Rate		-	-	60	-	Hz
	Pixels Rate		-	150.0	150.0	159.9	MHz
Timing	Mipi CLK	Frequency	fCLK	490	490	498	MHz
		Period	Tclk	2.01	2.04	2.04	ns
	Horizontal	Horizontal total time	tHP	1946	1946	1951	t_{CLK}
		Horizontal Active time	tHadr	1920			t_{CLK}
		Horizontal Pulse Width	tHsync	1	1	1	t_{CLK}
		Horizontal Back Porch	tHBP	32	32	32	t_{CLK}
		Horizontal Front Porch	tHFP	110	110	133	t_{CLK}
	Vertical	Vertical total time	tvp	1343	1343	1366	t_H
		Vertical Active time	tVadr	1200			t_H
		Vertical Pulse Width	tVsync	1	1	1	t_H
		Vertical Back Porch	tVBP	14	14	14	t_H
		Vertical Front Porch	tVFP	11	11	16	t_H
Bit Rate			TX SPD (MBPS)	980	980	995	Mbps
Lane				-	4	-	Lane

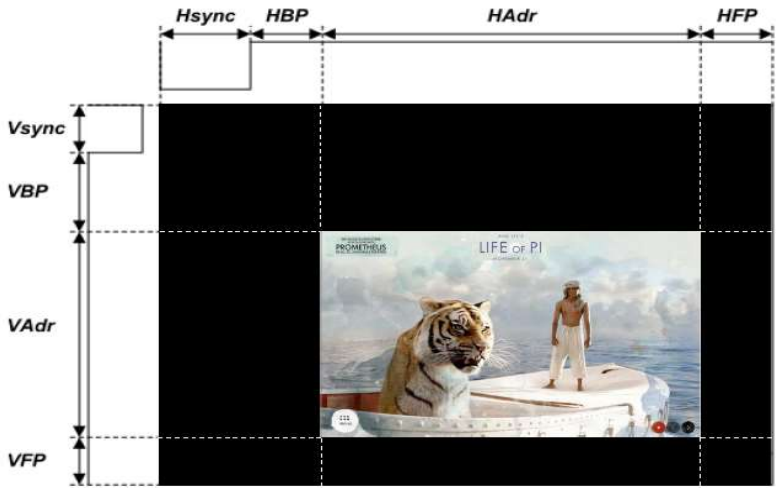

3.4 Power Sequence

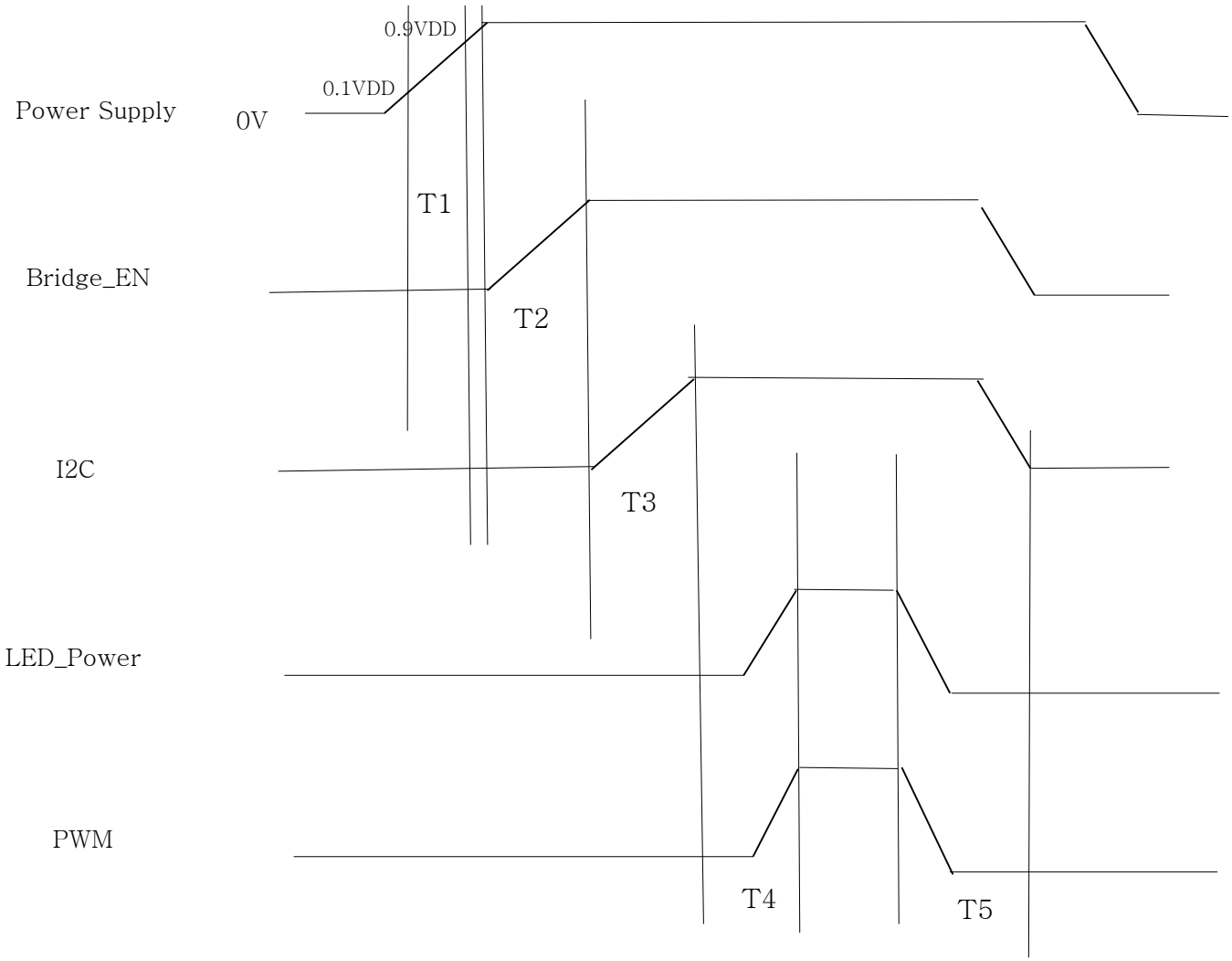

0.5 ms ≤ T1 ≤ 10 ms
T2:10ms
T3:10ms
200ms ≤T4
200ms ≤T5

3.4 Power Sequence

INITIALIZATION SEQUENCE NUMBER	INITIALIZATION SEQUENCE DESCRIPTION
Init seq 1	Power on
Init seq 2	After power is applied and stable, the DSI CLK lanes MUST be in HS state and the DSI data lanes MUST be driven to LP11 state
Init seq 3	Set EN pin to Low
Wait 10 ms (1)	
Init seq 4	Tie EN pin to High
Wait 10 ms (1)	
Init seq 5	Initialize all CSR registers to their appropriate values based on the implementation (The SN65DSI8x is not functional until the CSR registers are initialized)
Init seq 6	Set the PLL_EN bit (CSR 0x0D.0)
Wait 10 ms (1)	
Init seq 7	Set the SOFT_RESET bit (CSR 0x09.0)
Wait 10 ms (1)	
Init seq 8	Change DSI data lanes to HS state and start DSI video stream
Wait 5 ms (1)	
Init seq 9	Read back all resisters and confirm they were correctly written
Init seq 10	Write 0xFF to CSR 0xE5 and CSR 0xE6 to clear the error registers
Wait 1 ms (1)	
Init seq 11	Read CSR 0xE5 and CSR 0xE6. If CSR 0xE5 and CSR 0xE6 != 0x00, then go back to step #2 and re-initialize

(1) Minimum recommended delay. It is fine to exceed these.

注：1）CSR registers, PLL_EN,SOFT_RESET都是寄存器，上电时需要通过I2C配置。Data的状态由处理器进行控制。

2）Sequence 9,10,11，这些是IC监测到错误后重新启动时的初始化流程，如果不需要可以不设置。

3）背光PWM时序需与LED_Power同时上电。

4.0 OPTICAL SPECIFICATIONS

4.1 Overview

The test of optical specifications shall be measured in a dark room (ambient luminance ≤ 1lux and temperature = 25±2℃) with the equipment of Luminance meter system (Gonio meter system and TOPCON BM-5) and test unit shall be located at an approximate dista nce 50cm from the LCD surface at a viewing angle of θ and Φ equal to 0°. We refer to θØ =0 (=θ3) as the 3 o' clock direction (the "right"), θØ=90 (= θ12) as the 12 O' clock direction ("upward"), θØ=180 (= θ9) as the 9 O' clock direction ("left") and θØ=27 0(= θ6) as the 6 O' clock direction ("bottom"). While scanning θ and/or Ø, the center of the measuring spot on the Display surface shall stay fixed.

4.2 Optical Specifications

< Table9. Optical Table >

Item	Symbol	Condition	Min	Typ.	Max	Unit	Note
Viewing Angle	θL	Cr≥10	70	80	--	deg	Note 1
	θ_R		70	80	--		
	ψ_T		70	80	--		
	ψ_B		70	80	--		
Contrast Ratio	Cr	θ=0° FF=0°	700	900		-	Note 2
Response Time	Tr+Tf		--	30	35	ms	Note 3
Color Coordinate of CIE1931	Rx	θ=0°	-0.03	0.644	+0.03	-	@BOE BLU Note 4
	Ry			0.344			
	Gx			0.315			
	Gy			0.632			
	Bx			0.157			
	By			0.054			
	Wx			0.310			
	Wy			0.330			
NTSC Ratio	NTSC	CIE1931	--	72	--	%	@BOE BLU Note 5
Polarization Direction of Fro nt Polarizer	PdF	-		0		deg	Absorption axis Note 6
Polarization Direction of Rea r Polarizer	PdR			90		deg	
Luminance of White	Y_w	θ=0°	-	400	-	cd/m²	Note 7
Brightness Uniformity	△Bp	θ=0°	75	80	-	%	Note 8

Note 1:**The definition of Viewing Angle**
Refer to the graph below marked by θ and Φ.

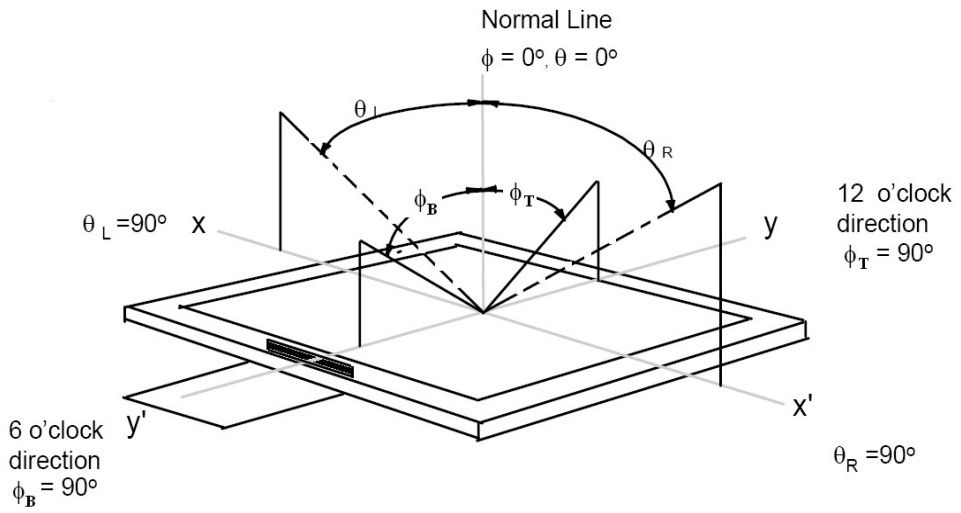

Note2:**ThedefinitionofContrastRatio**

$$\text{Contrast Ratio(CR)} = \frac{\text{Luminance When LCD is at "White" state}}{\text{Luminance When LCD is at "Black" state}}$$

(Contrast Ratio is measured in optimum common electrode voltage)

Note3:**DefinitionofResponse time.**(Test LCD using RD80S or similar equipments):
The output sign also photo detector are measured when the input sign also are changed from "black" to "white" (Voltage falling time)and from "white" to "black" (Voltage rising time), respectively . The response time is defined as the time interval between the 10% and 90% of amplitudes . Refer to figures below.

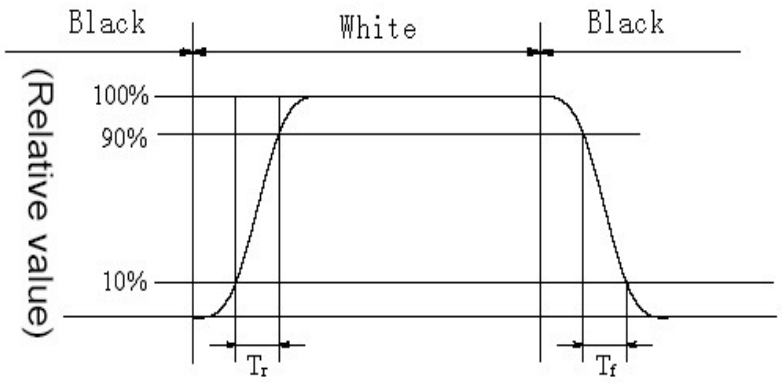

Note 4: Color Coordinates of CIE 1931
The test condition is at ILED=20mA and measured on the surface of LCD module at 25℃.
Measurement equipment:CS2000 or similar equipments
The Color Coordinate (CIE 1931) is the measurement of the center of the display shown in below figure.

The copyright belongs to YHW , Any unauthorized use is prohibited

Note 5: Definition of Color of CIE Coordinate and NTSC Ratio.

$$S = \frac{\text{area of RGB triangle}}{\text{area of NTSC triangle}} \times 100\%$$

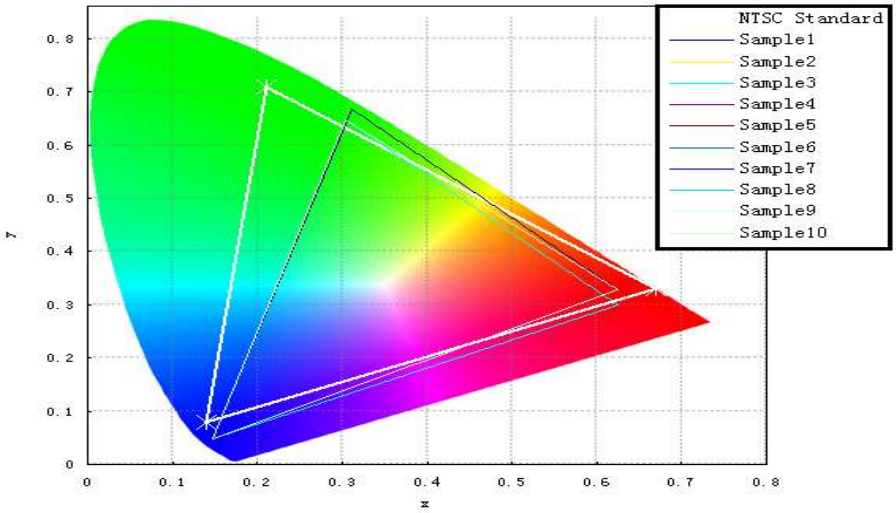

Note 6: Polarization Direction Definition

- Viewing direction is normal user viewing direction which is vertical to the display surface
- The polarizer which is closer to viewer is defined as Front Polarizer
- The polarizer which is on the rear side of viewer is defined as Rear Polarizer
- The X axis is defined as parallel line to top & bottom sidelines of the Active Area
- PdF which is marked in blue arrow is polarization degree of Front polarizer
- PdB which is marked in red arrow is polarization degree of Back polarizer
- The polarization degree parameter must be indicated in range of 0deg to 180deg according to above definition

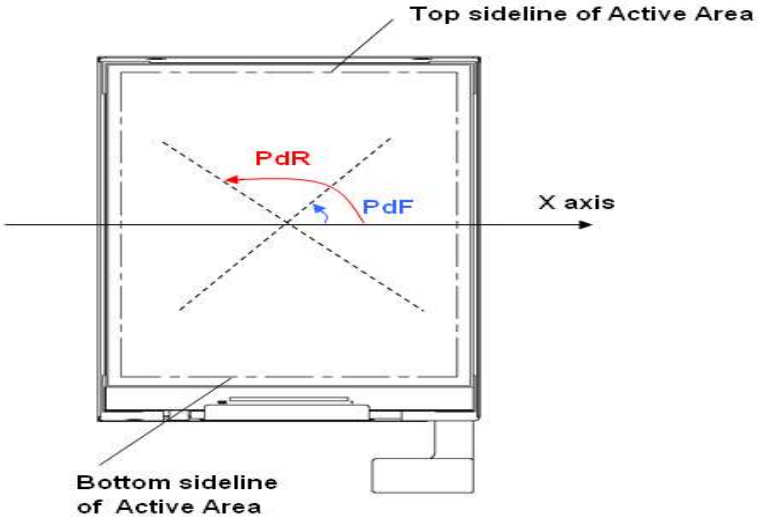

Note7:Luminance measurement

The data are measured after LEDs are lighted on for more than 9 minutes and LCM displays are fully
The test condition is at ILED=22mA and measured on the surface of LCD module at 25℃.

●

white. The brightness is the value of center measured spots. Measurement equipment LMS OTS or si milar equipments(Field of view:1deg,Distance:50cm)

●Measuring surroundings: Dark room.

●Measuring temperature: Ta=25℃.

●Adjust operating voltage to get optimum contrast at the center of the display.

●Measured value at the center point of LCD panel must be after more than 5 minutes while backlight turning on.

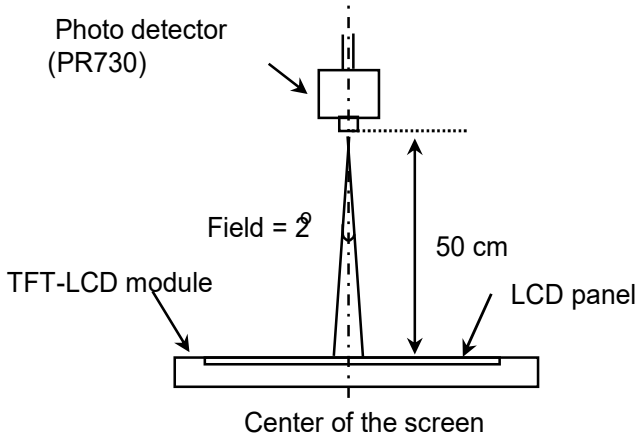

Optical characteristics measurement setup

Note8:Uniformity

●The test condition is at ILED=22mA and measured on the surface of LCD module at 25℃.

●Measurement equipment:LMS OTS or similar equipments

●The luminance uniformity is calculated by using following formula:

●△Bp = Bp (Min.) / Bp (Max.)×100 (%)

●Bp (Max.) = Maximum brightness in 9 measured spots

●Bp (Min.) = Minimum brightness in 9 measured spots.

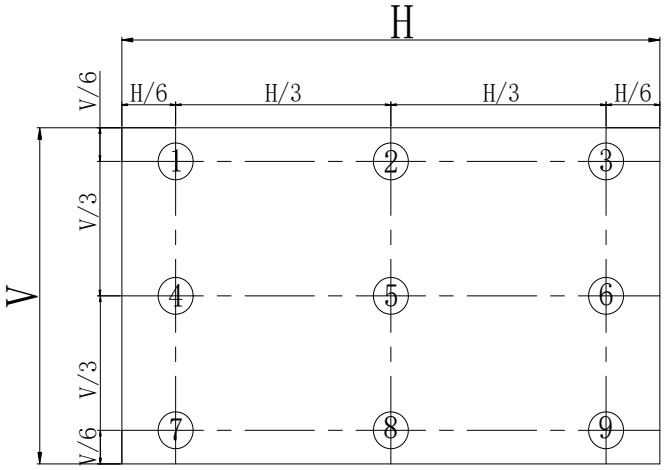

5.0 RELIABLITY TEST

The Reliability test items and its conditions are shown in below.

<Table 10. Reliability Test Parameters >

No	Test Items	Conditions
1	High temperature storage test	80℃ 240hr
2	Low temperature storage test	-30℃ 240hr
3	Low temperature operation test	-20℃ 240hr
4	High temperature operation test	70℃ 240hr
5	High temperature & high humidity (operation test)	60℃ 90%RH 240hr
6	Thermal Shock Test	-40℃~85℃ 0.5hr/cycle 100cycle
7		
8		
9		
10		
…		

6.0 PACKING INFORMATION(产品形态： MDL)

TBD

8.0 Handling & Cautions

8.1 Mounting Method

- The panel of the LCD consists of two thin glasses with polarizers which easily get damaged. So extreme care should be taken when handling the LCD.
- Excessive stress or pressure on the glass of the LCD should be avoided. Care must be taken to insure that no torsional or compressive forces are applied to the LCD unit when it is mounted.
- If the customer's set presses the main parts of the LCD, the LCD may show the abnormal display. But this phenomenon does not mean the malfunction of the LCD and should be pressed by the way of mutual agreement.
- To determine the optimum mounting angle, refer to the viewing angle range in the specification for each model.
- Mount a LCD module with the specified mounting parts.

8.2 Caution of LCD Handling and Cleaning

- Since the LCD is made of glass, do not apply strong mechanical impact or static load onto it. Handling with care since shock, vibration,and careless handling may seriously affect the product. If it falls from a high place or receives a strong shock, the glass may be broken.
- The polarizers on the surface of panel are made from organic substances. Be very
- to clean the LCD ‘s surface with wipe lightly.
  -IPA(Isopropyl Alcohol), Ethyl Alcohol, Trichlorotriflorothane
- Do not wipe the LCD's surface with dry or hard materials that will damage the polarizers
  careful for chemicals not to touch the polarizers or it leads the polarizers to be deteriorated.
  and others. Do not use the following solvent. -Water, Ketone, Aromatics
  If the use of a chemical is unavoidable, use soft cloth with solvent (recommended below)
- It is recommended that the LCD be handled with soft gloves during assembly, etc. The polarizers on the LCD's surface are vulnerable to scratch and thus to be damaged by sharp particles.
- Do not drop water or any chemicals onto the LCD's surface.
- A protective film is supplied on the LCD and should be left in place until the LCD is required for operation.
- The ITO pad area needs special careful caution because it could be easily corroded. Do not contact the ITO pad area with HCFC,Soldering flux,Chlorine,Sulfur,saliva or fingerprint. To prevent the ITO corrosion, customers are recommended that the ITO area would be covered by UV or silicon.

8.3 Caution Against Static Charge

- The LCD modules use C-MOS LSI drivers, so customers are recommended that any unused input terminal would be connected to Vdd or Vss, do not input any signals before power is turn on, and ground you body, work/assembly area, assembly equipments to protect against static electricity.
- Remove the protective film slowly, keeping the removing direction approximate 30-degree not vertical from panel surface, If possible, under ESD control device like ion blower, and the humidity of working room should be kept over 50%RH to reduce the risk of static charge.
- Avoid the use work clothing made of synthetic fibers. We recommend cotton clothing or other conductivity-treated fibers.
- In handling the LCD, wear non-charged material gloves. And the conducting wrist to the earth and the conducting shoes to the earth are necessary.

8.4 Caution For operation

- It is indispensable to drive the LCD within the specified voltage limit since the higher Voltage than the limit causes the shorter LCD's life. An electro-chemical reaction due to DC causes undesirable deterioration of the LCD so that the use of DC drive should avoid.
- Do not connect or disconnect the LCD to or from the system when power is on.
- Never use the LCD under abnormal conditions of high temperature and high humidity.
- When expose to drastic fluctuation of temperature (hot to cold or cold to hot) ,the LCD may be affected; Specifically, drastic temperature fluctuation from cold to hot ,produces dew on the LCD's surface which may affect the operation of the polarizer and the LCD.
- Response time will be extremely delayed at lower temperature than the operating temperature range and on the other hand at higher temperature LCD may turn black at temperature above its operational range. However those phenomena do not mean malfunction or out of order with the LCD. The LCD will revert to normal operation once the temperature returns to the recommended temperature range for normal operation.
- Do not display the fixed pattern for a long time because it may develop image sticking due to the LCD structure. If the screen is displayed with fixed pattern, use a screen saver.

9.0 APPENDIX

Mechanical Drawing

Drawing Attachment: Front

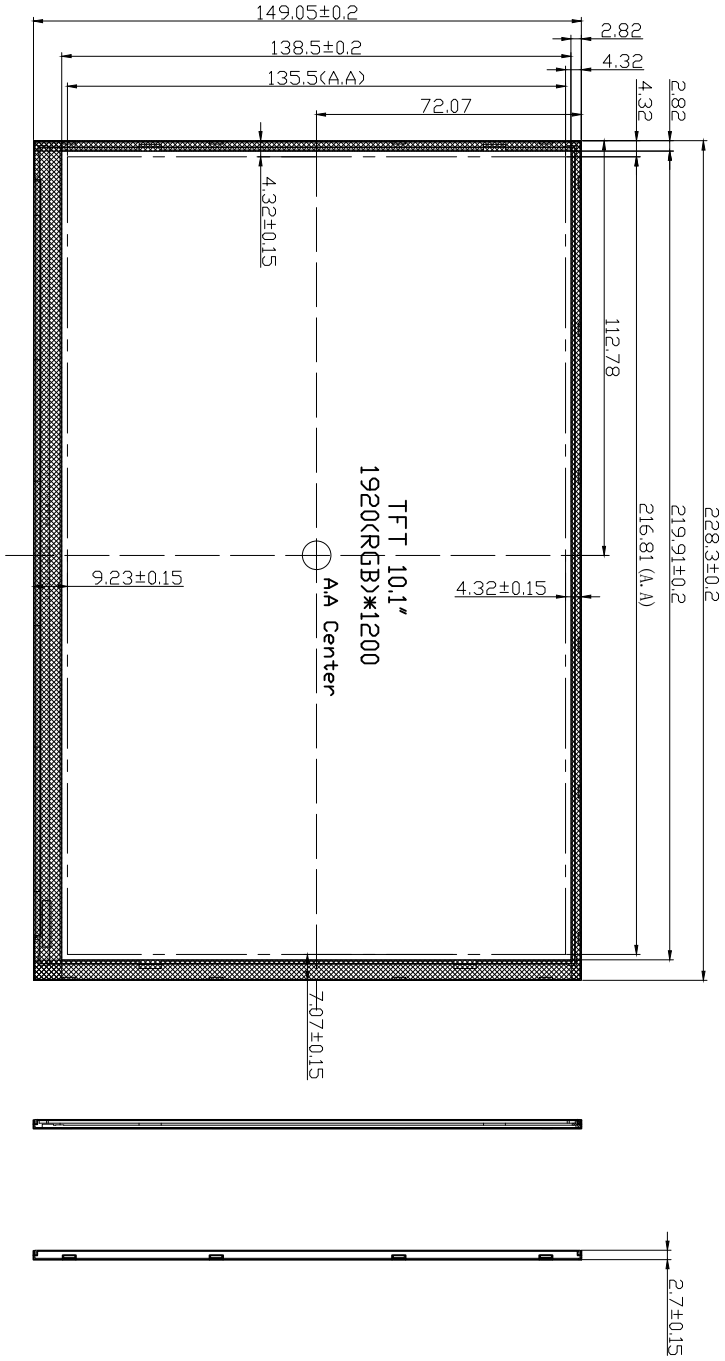

Mechanical Drawing
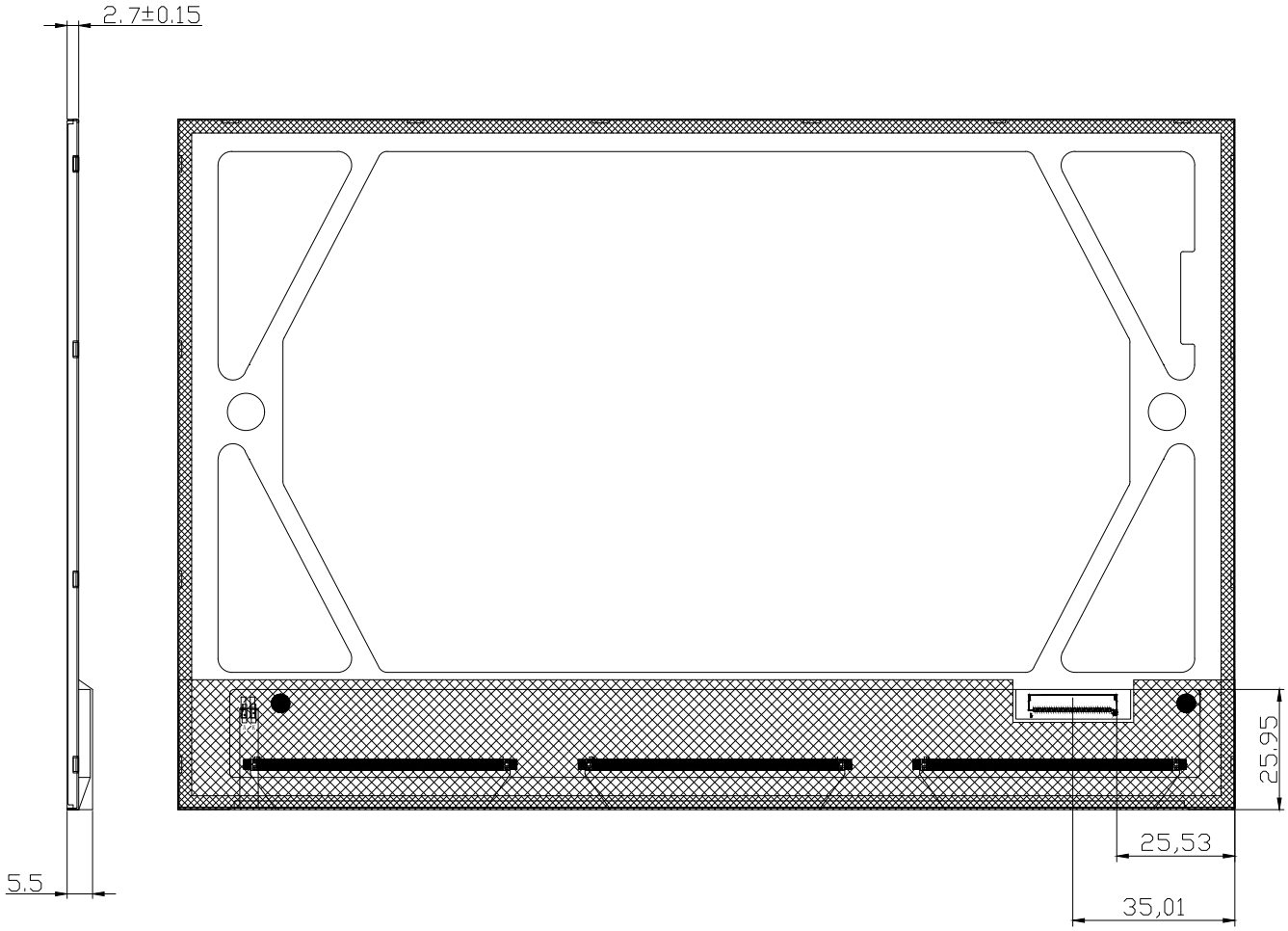
Drawing Attachment: Back